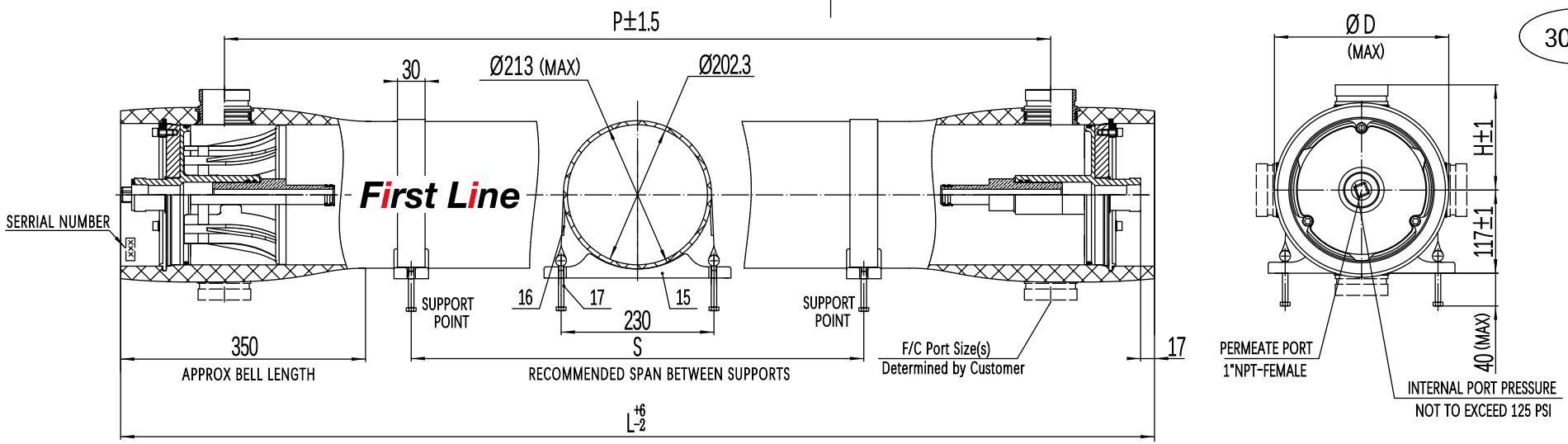

300PSI

REF.	QTY.	PART NUMBER	DESCRIPTION	MATERIAL	REMARK
1	1	See Selection Table	Shell	Epoxy FRP	White
2	2~4	20002644	Feed/Conc. Port	316LSST	1.5"
2.1	2~4	20002664	Feed/Conc. Port	316LSST	2"
2.2	2~4	20002665	Feed/Conc. Port	316LSST	2.5"
3	2~4	20002424	O-ring , F/C Port	EPDM	41.2x3.55 (1.5")
3.1	2~4	20002645	O-ring , F/C Port	EPDM	56x7 (1.5")
3.2	2~4	20002425	O-ring , F/C Port	EPDM	53x3.55 (2")
3.3	2~4	20002677	O-ring , F/C Port	EPDM	68x7 (2")
3.4	2~4	20002426	O-ring , F/C Port	EPDM	69x3.55 (2.5")
3.5	2~4	20002678	O-ring , F/C Port	EPDM	82x7 (2.5")
4	2~4	20003264	Locknut , Permeate Port	Metal	1.5"
4.1	2~4	20003265	Locknut , Permeate Port	Metal	2"
4.2	2~4	20003266	Locknut , Permeate Port	Metal	2.5"
5	2	20000395	Bearing Plate	Aluminium Alloy	
6	2	20002332	Sealing Plate	ABS	
7	2	20000901	O-ring , Head	EPDM	187x7
8	4	20000314	O-ring , Adapter	EPDM	36.5x3.55
9	1	20000314	O-ring , Plug	EPDM	36.5x3.55
10	2	20000383	Retaining Ring	304SST	
11	1	20000073	Plug	ABS	
12	6	20000006	Locking Kit Segment	304SST	
13	6	20000196	Locking Segment Screw	304SST	M8x20
14	6	20000197	Spring Pad	304SST	Ø8
15	2~3	20000001	Saddle	Engineering Thermoplastic.	
16	2~3	20000186	Strap	304SST-PVC	
17	4~6	20000198	Strap Screw	304SST	M8*90
18	2	20000364	Adapter	ABS	
19	2~6	20000020	Shim , Adapter	ABS	2mm
20	4	20002423	O-ring , PWT	EPDM	23.6x2.65
21	1	20000418	Thrust Ring	ABS	

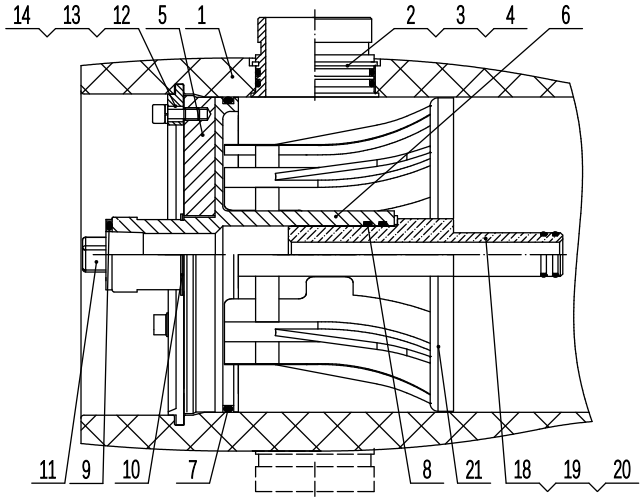

PORT SIZE CODE		D(MM)	H(MM)
D	1.5" Grooved End	243	148
E	2" Grooved End	244	151
F	2.5" Grooved End	247	153

Ref.	Part Number	L (MM)	P (MM)	S (MM)	Approx Assembly Weight (KG)
1	F80300S-1	1494	1194	580	24
2	F80300S-2	2510	2210	1350	30
3	F80300S-3	3526	3226	2080	36
4	F80300S-4	4542	4242	1600x2	42
5	F80300S-5	5558	5258	2000x2	48
6	F80300S-6	6574	6274	2360x2	54
7	F80300S-7	7590	7290	2000x3	61
8	F80300S-8	8606	8306	2350x3	67

GENERAL NOTES:
1. DIMENSIONS IN MM.
2. MAX. ANGULAR VARIATION BETWEEN ANY PORT ±0.5.
3. DESIGN PRESSURE: 300PSI.
4. DESIGN TEMPERATURE: Min.-7°C(20°F)-Max.49°C(120°F).
5. FOR OTHER TEMPERATURES OUT OF THIS RANGE CONTACT FIRST LINE .
6. CENTER VESSEL ON 2, 3 OR 4 SUPPORTS AT SPAN"S": 2 SUPPORTS(FOR LENGTH 1-3), 3 SUPPORTS(FOR LENGTH4-6) OR 4 SUPPORTS (FOR LENGTH 7-8) .
7. FOR VESSEL INSTALLATION AND MAINTENANCE PLEASE REFER TO FIRST LINE USER'S MANUAL.
8. FOR REFERENCE ONLY, NOT FOR CONSTRUCTION UNLESS CERTIFIED.

Harbin First Line Environment Technology Co.,Ltd.

First Line	Design Date	Model F80-300S Pressure Vessel	
	Review Date	DRG F80-300S-00-01	
	Approval Date	Unit MM	REV. 2026